EANCOM® 2002 S3

HANMOV

Cargo/goods handling and movement message

Edition 2016 Upd. 2021

1. Introduction 2
2. Message Structure Chart 3
3. Branching Diagram 4
4. Segments Description 8
5. Segments Layout 11
6. Example(s) 44

1. Introduction

Status

MESSAGE TYPE	: HANMOV
REFERENCE DIRECTORY	: D.01B
EANCOM® SUBSET VERSION	: 004

Definition

A message from a party to a warehouse, distribution centre, or logistics service provider identifying the handling services and where required the movement of specified goods, limited to warehouses within the jurisdiction of the distribution centre or logistics service provider.

Principles

This message addresses the indirect flow of goods between supplier and buyer through a warehouse, distribution centre or logistics service provider.

The functions of the message are limited to :

- the preparation of goods for shipment;
- the picking of goods according to instructions;
- the packing or unpacking of goods;
- marking and labelling on the packages of goods;
- instructions regarding the movement of goods between warehouses.

2. Message Structure Chart

EANCOM® 2002 S3 Edition 2016 Upd. 2021 Part II
HANMOV Cargo/goods handling and movement message

UNA	1	C	1	- Service string advice
UNB	2	M	1	- Interchange header

Cargo/Goods Handling And Movement Heading Section

UNH	3	M	1	- Message header
BGM	4	M	1	- Beginning of message
DTM	5	C	9	- Date/time/period
HAN	6	C	9	- Handling instructions
FTX	7	C	9	- Free text
SG2		C	9	- RFF-DTM
RFF	8	M	1	- Reference
DTM	9	C	9	- Date/time/period
SG3		C	9	- NAD-LOC-SG4
NAD	10	M	1	- Name and address
LOC	11	C	9	- Place/location identification
SG4		C	9	- RFF
RFF	12	M	1	- Reference

Cargo/Goods Handling And Movement Detail Section

SG8		C	99	- LIN-PIA-IMD-HAN-SG9-QTY-DTM-FTX-SG11-SG12
LIN	13	M	1	- Line item
PIA	14	C	9	- Additional product id
IMD	15	C	99	- Item description
HAN	16	C	9	- Handling instructions
SG9		C	9	- NAD
NAD	17	M	1	- Name and address
QTY	18	C	9	- Quantity
DTM	19	C	9	- Date/time/period
FTX	20	C	9	- Free text
SG11		C	9	- RFF
RFF	21	M	1	- Reference
SG12		C	99	- PAC-MEA-QTY-SG13
PAC	22	M	1	- Package
MEA	23	C	9	- Measurements
QTY	24	C	9	- Quantity
SG13		C	9	- PCI-GIN
PCI	25	M	1	- Package identification
GIN	26	C	9	- Goods identity number

Cargo/Goods Handling And Movement Summary Section

UNT	27	M	1	- Message trailer
UNZ	28	M	1	- Interchange trailer

3. Branching Diagram

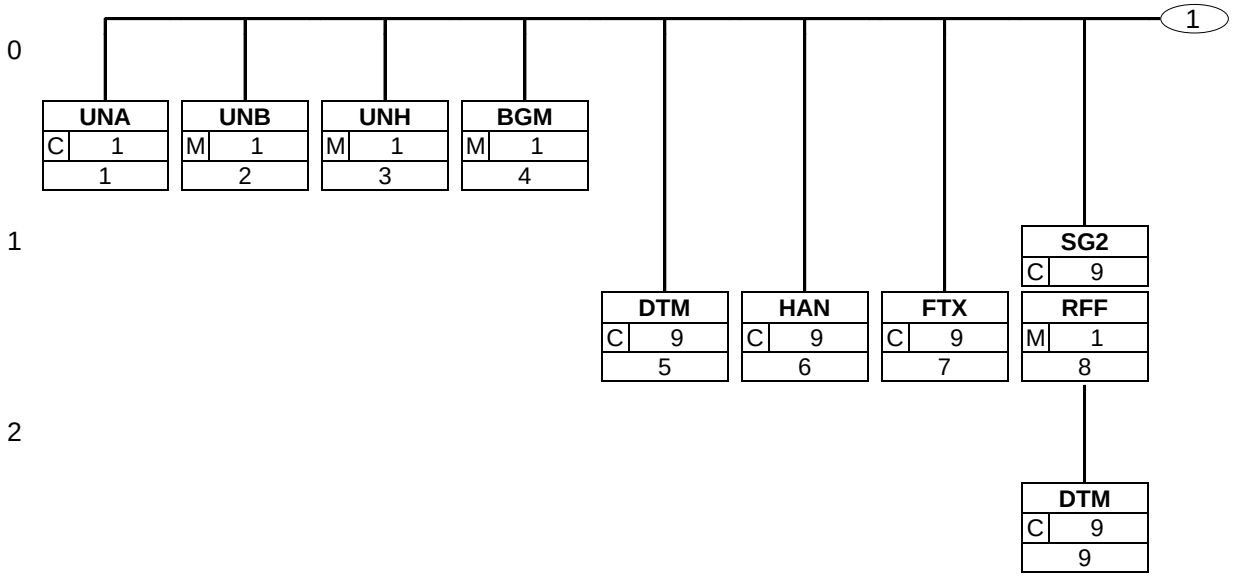

3. Branching Diagram

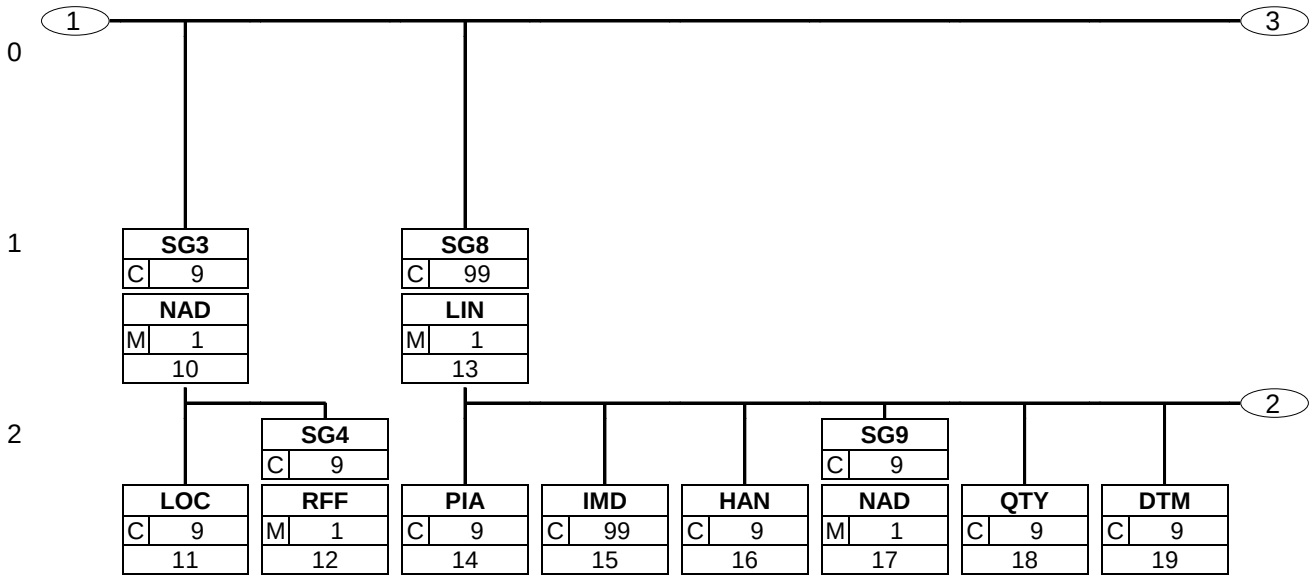

3. Branching Diagram

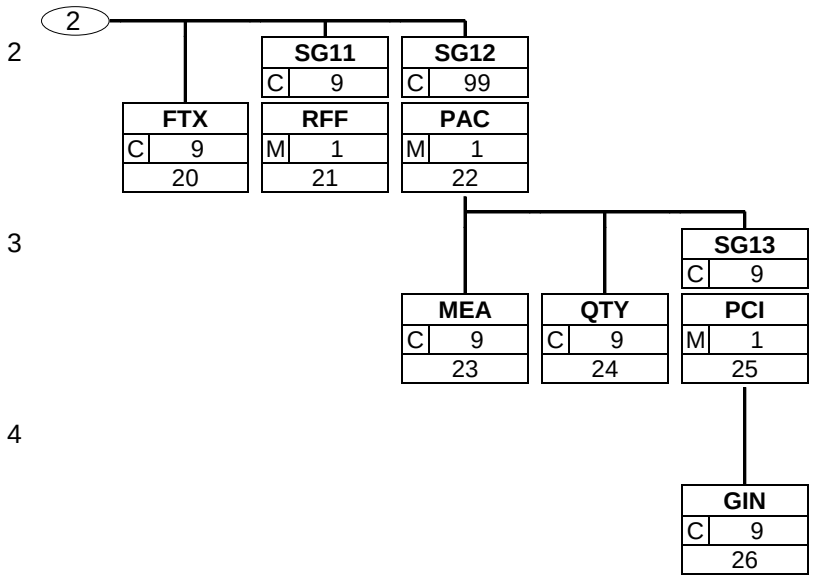

3. Branching Diagram

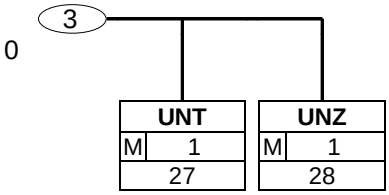

4. Segments Description

UNA - C 1 - Service string advice

The service string advice shall begin with the upper case characters UNA immediately followed by six characters in the order shown below. The same character shall not be used in more than one position of the UNA.

UNB - M 1 - Interchange header

This segment is used to envelope the interchange, as well as to identify both, the party to whom the interchange is sent and the party who has sent the interchange. The principle of the UNB segment is the same as a physical envelope which covers one or more letters or documents, and which details, both the address where delivery is to take place and the address from where the envelope has come.

Cargo/Goods Handling And Movement Heading Section

UNH - M 1 - Message header

This segment is used to head, identify and specify a message.

BGM - M 1 - Beginning of message

This segment is used to indicate the type and function of a message and to transmit the identifying number.

DTM - C 9 - Date/time/period

This segment is used to specify the date of the cargo/goods handling and movement message.

HAN - C 9 - Handling instructions

This segment is used to provide handling instructions, and where necessary to provide hazardous information, relevant to the complete cargo/goods handling and movement message.

FTX - C 9 - Free text

This segment is used to indicate free text information related to the entire message.

SG2 - C 9 - **RFF-DTM**

A group of segments containing references and constants which apply to the entire message.

RFF - M 1 - Reference

This segment is used to specify references which relate to the whole cargo/goods handling and movement message, for example, contract number.

DTM - C 9 - Date/time/period

This segment is used to specify dates relating to the references given in the previous RFF segment.

SG3 - C 9 - **NAD-LOC-SG4**

A group of segments to identify a party, related references, locations, contacts and required documents.

NAD - M 1 - Name and address

This segment is used to identify the parties involved in the Cargo/goods handling and movement process. Identification of the service ordering party (e.g. buyer, supplier, etc) and the logistic service provider is mandatory in the message.

LOC - C 9 - Place/location identification

This segment is used to identify locations relevant to the parties identified in the NAD segment.

SG4 - C 9 - **RFF**

A group of segments to specify a reference related to the party.

RFF - M 1 - Reference

This segment is used to specify reference numbers related to the trading parties identified in the previous NAD segment.

4. Segments Description

Cargo/Goods Handling And Movement Detail Section

SG8 - C 99 - **LIN-PIA-IMD-HAN-SG9-QTY-DTM-FTX-SG11-SG12**

A group of segments providing details of the individually handled product items.

LIN - M 1 - Line item

This segment is used to signify the beginning of the detail section of the cargo/ goods handling and movement message.

PIA - C 9 - Additional product id

This segment is used to specify additional or substitutional item identification codes such as a buyer's or supplier's item number.

IMD - C 99 - Item description

This segment is used to provide description of the current line item.

HAN - C 9 - Handling instructions

This segment is used to provide handling instructions, and where necessary to provide hazardous information, relevant to the current line item.

SG9 - C 9 - **NAD**

A group of segments for identifying names and addresses and their functions.

NAD - M 1 - Name and address

This segment is used to identify parties related to the current line item. It may be used as an aid to product selection, e.g. all products from one manufacturer, or as information which is to be used when preparing a shipment containing the product, e.g. carrier, delivery party, etc.

QTY - C 9 - Quantity

This segment is used to specify quantities related to the current line item.

DTM - C 9 - Date/time/period

This segment is used to specify dates related to the current line item. Dates specified here may be used as an aid to product selection, e.g. destroy all products with a sell by date greater than 1st of January 2002.

FTX - C 9 - Free text

This segment is used to indicate free text information related to the current line item.

SG11 - C 9 - **RFF**

A group of segments to give reference numbers and dates.

RFF - M 1 - Reference

This segment is used to provide references specific to the line item. References specified here override any global references provided in the heading section of the cargo/goods handling and movement message when the same qualifier is used.

SG12 - C 99 - **PAC-MEA-QTY-SG13**

A group of segments providing details how the product item is packed, such as number and type of packages, physical measurements and quantities.

PAC - M 1 - Package

This segment is used to specify the packaging details for the currently identified line item.

MEA - C 9 - Measurements

This segment is used to provide measurements relevant to the packaging described in the PAC segment.

QTY - C 9 - Quantity

This segment is used to specify the quantity per package specified in the PAC segment.

4. Segments Description

SG13 - C 9 - **PCI-GIN**

A group of segments identifying one specific package or a number of packages, their marks and numbers.

PCI - M 1 - Package identification

This segment is used to provide markings and labels information relevant to the packaging identified in the PAC segment.

GIN - C 9 - Goods identity number

This segment is used to provide identification numbers relevant to the packaging identified in the PAC segment.

Cargo/Goods Handling And Movement Summary Section

UNT - M 1 - Message trailer

This segment is a mandatory UN/EDIFACT segment. It must always be the last segment in the message.

UNZ - M 1 - Interchange trailer

This segment is used to provide the trailer of an interchange.

5. Segments Layout

This section describes each segment used in the EANCOM® Cargo/goods handling and movement message. The original EDIFACT segment layout is listed. The appropriate comments relevant to the EANCOM® subset are indicated.

Notes:

1. The segments are presented in the sequence in which they appear in the message. The segment or segment group tag is followed by the (M)andatory / (C)onditional indicator, the maximum number of occurrences and the segment description.

2. Reading from left to right, in column one, the data element tags and descriptions are shown, followed by in the second column the EDIFACT status (M or C), the field format, and the picture of the data elements. These first pieces of information constitute the original EDIFACT segment layout.

   Following the EDIFACT information, EANCOM® specific information is provided in the third, fourth, and fifth columns. In the third column a status indicator for the use of (C)onditional EDIFACT data elements (see 2.1 through 2.3 below), in the fourth column the restricted indicator (see point 3 on the following page), and in the fifth column notes and code values used for specific data elements in the message.

2.1 (M)andatory data elements in EDIFACT segments retain their status in EANCOM®.

2.2 Additionally, there are five types of status for data elements with a (C)onditional EDIFACT status, whether for simple, component or composite data elements. These are listed below and can be identified when relevant by the following abbreviations:

- REQUIRED	**R**	Indicates that the entity is required and must be sent.
- ADVISED	**A**	Indicates that the entity is advised or recommended.
- DEPENDENT	**D**	Indicates that the entity must be sent in certain conditions, as defined by the relevant explanatory note.
- OPTIONAL	**O**	Indicates that the entity is optional and may be sent at the discretion of the user.
- NOT USED	**N**	Indicates that the entity is not used and should be omitted.

2.3 If a composite is flagged as **N, NOT USED**, all data elements within that composite will have blank status indicators assigned to them.

3. Status indicators detailed in the fourth column which directly relate to the code values detailed in the fifth **column** may have two values:

- RESTRICTED	*****	A data element marked with an asterisk (*) in the fourth column indicates that the listed codes in column five are the only codes available for use with this data element, in this segment, in this message.
- OPEN		All data elements where coded representation of data is possible and a restricted set of code values is not indicated are open (no asterisk in fourth column). The available codes are listed in the EANCOM® Data Elements and Code Sets Directory. Code values may be given as examples or there may be a note on the format or type of code to be used.

4. Different colours are used for the code values in the segment details: restricted codes are in red and open codes in blue.

5. Segments Layout

Segment number: 1

UNA	- C	1 - Service string advice			
Function: To define the characters selected for use as delimiters and indicators in the rest of the interchange that follows.					
		EDIFACT	GS1	*	Description
UNA1	Component data element separator	M an1	**M**	*	Used as a separator between component data elements contained within a composite data element (default value: ":")
UNA2	Data element separator	M an1	**M**	*	Used to separate two simple or composite data elements (default value: "+")
UNA3	Decimal notation	M an1	**M**	*	Used to indicate the character used for decimal notation (default value:".")
UNA4	Release indicator	M an1	**M**	*	Used to restore any service character to its original specification (value: "?").
UNA5	Reserved for future use	M an1	**M**	*	(default value: space)
UNA6	Segment terminator	M an1	**M**	*	Used to indicate the end of segment data (default value: " ' ")

Segment Notes:

The service string advice shall begin with the upper case characters UNA immediately followed by six characters in the order shown below. The same character shall not be used in more than one position of the UNA.
This segment is used to inform the receiver of the interchange that a set of service string characters which are different to the default characters are being used.
When using the default set of service characters, the UNA segment need not be sent. If it is sent, it must immediately precede the UNB segment and contain the four service string characters (positions UNA1, UNA2, UNA4 and UNA6) selected by the interchange sender.
Regardless of whether or not all of the service string characters are being changed every data element within this segment must be filled, (i.e., if some default values are being used with user defined ones, both the default and user defined values must be specified).
When expressing the service string characters in the UNA segment, it is not necessary to include any element separators.
The use of the UNA segment is required when using a character set other than level A.
UNA:+.? '

5. Segments Layout

Segment number: 2

UNB	- M	1 - Interchange header			
Function: To start, identify and specify an interchange.					
		EDIFACT	GS1	*	Description
S001	SYNTAX IDENTIFIER	M	**M**		See Part I chapter 5.2.7 and segment notes.
0001	Syntax identifier	M a4	**M**	*	UNOA = UN/ECE level A UNOB = UN/ECE level B UNOC = UN/ECE level C UNOD = UN/ECE level D UNOE = UN/ECE level E UNOF = UN/ECE level F
0002	Syntax version number	M n1	**M**	*	3 = Version 3
S002	INTERCHANGE SENDER	M	**M**		
0004	Sender identification	M an..35	**M**		GLN (n13)
0007	Partner identification code qualifier	C an..4	**R**	*	14 = GS1
0008	Address for reverse routing	C an..14	**O**		
S003	INTERCHANGE RECIPIENT	M	**M**		
0010	Recipient identification	M an..35	**M**		GLN (n13)
0007	Partner identification code qualifier	C an..4	**R**	*	14 = GS1
0014	Routing address	C an..14	**O**		
S004	DATE/TIME OF PREPARATION	M	**M**		
0017	Date of preparation	M n6	**M**		YYMMDD
0019	Time of preparation	M n4	**M**		HHMM
0020	Interchange control reference	M an..14	**M**		Unique reference identifying the interchange. Created by the interchange sender.
S005	RECIPIENT'S REFERENCE, PASSWORD	C	**O**		
0022	Recipient's reference/ password	M an..14	**M**		
0025	Recipient's reference/ password qualifier	C an2	**O**		
0026	Application reference	C an..14	**O**		Message identification if the interchange contains only one type of message.
0029	Processing priority code	C a1	**O**		A = Highest priority
0031	Acknowledgement request	C n1	**O**		1 = Requested
0032	Communications agreement ID	C an..35	**O**	*	EANCOM.....
0035	Test indicator	C n1	**O**		1 = Interchange is a test

Segment Notes:

This segment is used to envelope the interchange, as well as to identify both, the party to whom the interchange is sent and the party who has sent the interchange. The principle of the UNB segment is the same as a physical envelope which covers one or more letters or documents, and which details, both the address where delivery is to take place and the address from where the envelope has come.

5. Segments Layout

Segment number: 2

S001: The character encoding specified in basic code table of ISO/IEC 646 (7-bit coded character set for information interchange) shall be used for the interchange service string advice (if used) and up to and including the composite data element S001 'Syntax identifier' in the interchange header. The character repertoire used for the characters in an interchange shall be identified from the code value of data element 0001 in S001 'Syntax identifier' in the interchange header. The character repertoire identified does not apply to objects and/or encrypted data.
The default encoding technique for a particular repertoire shall be the encoding technique defined by its associated character set specification.
DE 0001: The recommended (default) character set for use in EANCOM® for international exchanges is character set A (UNOA). Should users wish to use character sets other than A, an agreement on which set to use should be reached on a bilateral basis before communications begin.
DE 0004, 0008, 0010, 0014, 0042 and 0046: Within EANCOM® the use of the Global Location Number (GLN) is recommended for the identification of the interchange sender and recipient.
DE 0008: Identification (e.g. a division) specified by the sender of the interchange, to be included if agreed, by the recipient in response interchanges, to facilitate internal routing.
DE 0042: Sub-level of sender internal identification, when further sub-level identification is required.
DE 0014: The address for routing, provided beforehand by the interchange recipient, is used by the interchange sender to inform the recipient of the internal address, within the latter's systems, to which the interchange should be routed. It is recommended that the GLN be used for this purpose.
DE 0007: Identification (e.g. a division) specified by the recipient of the interchange, to be included if agreed, by the sender in response interchanges, to facilitate internal routing.
DE 0046: Sub-level of recipient internal identification, when further sub-level identification is required.
DE S004: The date and time specified in this composite should be the date and time at which the interchange sender prepared the interchange. This date and time may not necessarily be the same as the date and time of contained messages.
DE 0020: The interchange control reference number is generated by the interchange sender and is used to identify uniquely each interchange. Should the interchange sender wish to re-use interchange control reference numbers, it is recommended that each number be preserved for at least a period of three months before being re-used. In order to guarantee uniqueness, the interchange control reference number should always be linked to the interchange sender's identification (DE 0004).
DE S005: The use of passwords must first be agreed bilaterally by the parties exchanging the interchange.
DE 0026: This data element is used to identify the application, on the interchange recipient's system, to which the interchange is directed. This data element may only be used if the interchange contains only one type of message, (e.g. only invoices). The reference used in this data element is assigned by the interchange sender.
DE 0031: This data element is used to indicate whether an acknowledgement to the interchange is required. The EANCOM® APERAK or CONTRL message should be used to provide acknowledgement of interchange receipt. In addition, the EANCOM® CONTRL message may be used to indicate when an interchange has been rejected due to syntax errors.
DE 0032: This data element is used to identify any underlying agreements which control the exchange of data. Within EANCOM® , the identity of such agreements must start with the letters 'EANCOM', the remaining characters within the data element being filled according to bilateral agreements.

UNB+UNOA:3+5412345678908:14+8798765432106:14+020102:1000+12345555+++++EANCOMREF 52'

5. Segments Layout

Segment number: 3

UNH - M 1 - Message header					
Function: To head, identify and specify a message.					
		EDIFACT	GS1	*	Description
0062	Message reference number	M an..14	**M**		Senders unique message reference. Sequence number of messages in the interchange. DE 0062 in UNT will have the same value. Generated by the sender.
S009	MESSAGE IDENTIFIER	M	**M**		
0065	Message type	M an..6	**M**	*	HANMOV = Cargo/goods handling and movement message
0052	Message version number	M an..3	**M**	*	D = Draft version/UN/EDIFACT Directory
0054	Message release number	M an..3	**M**	*	01B = Release 2001 - B
0051	Controlling agency	M an..2	**M**	*	UN = UN/CEFACT
0057	Association assigned code	C an..6	**R**	*	EAN004 = GS1 version control number (GS1 Permanent Code) Indicates that the message is the EANCOM version 004 of the Cargo/Goods Handling and Movement message.
0068	Common access reference	C an..35	**N**		
S010	STATUS OF THE TRANSFER	C	**N**		
0070	Sequence of transfers	M n..2			
0073	First and last transfer	C a1			
Segment Notes: This segment is used to head, identify and specify a message. DE's 0065, 0052, and 0054: Indicate that the message is a UNSM Cargo/Goods Handling and Movement message based on the D.01B directory. Example: UNH+1+HANMOV:D:01B:UN:EAN004'					

5. Segments Layout

Segment number: 4

BGM - M 1 - Beginning of message					
Function: To indicate the type and function of a message and to transmit the identifying number.					
		EDIFACT	GS1	*	Description
C002	DOCUMENT/MESSAGE NAME	C	**R**		
1001	Document name code	C an..3	**R**	*	738 = Cargo/goods handling and movement message
1131	Code list identification code	C an..17	**N**		
3055	Code list responsible agency code	C an..3	**R**	*	9 = GS1
1000	Document name	C an..35	**O**		
C106	DOCUMENT/MESSAGE IDENTIFICATION	C	**R**		
1004	Document identifier	C an..35	**R**		Cargo/goods handling and movement number assigned by document sender. For global unique identification of documents Global Document Type Identifier (GDTI) is available.
1056	Version identifier	C an..9	**N**		
1060	Revision identifier	C an..6	**N**		
1225	Message function code	C an..3	**R**	*	1 = Cancellation 5 = Replace 9 = Original 31 = Copy The message function, coded is a critical data element in this segment. It applies to all data indicated in the message. The following definitions apply for the restricted codes: 1 = Cancellation - A previous handling and movement notice is being cancelled. Only the mandatory segments in the message along with the NAD segments identifying the sender and recipient need to be re-transmitted. Identification of the previously sent message should take place in the RFF segment in group 2. 5 = Replacement - The current message cancels and replaces a previously sent handling and movement message. Identification of the previously sent message should take place in the RFF segment in group 2. 9 = Original - An original transmission of an handling and movement message. 31 = Copy - A copy of an handling and movement message for a third party for information purposes. The identification of the message being copied should be provided in data element 1004.
4343	Response type code	C an..3	**N**		
Segment Notes: This segment is used to indicate the type and function of a message and to transmit the identifying number. Example: BGM+738::9+WH3212+9'					

5. Segments Layout

Segment number: 5

DTM	- C	9 - Date/time/period			
Function: To specify date, and/or time, or period.					
		EDIFACT	GS1	*	Description
C507	DATE/TIME/PERIOD	M	**M**		
2005	Date or time or period function code qualifier	M an..3	**M**		10 = Shipment date/time, requested 137 = Document/message date/time 46E = Order completion date/time (GS1 Temporary Code)
2380	Date or time or period value	C an..35	**R**		
2379	Date or time or period format code	C an..3	**R**		102 = CCYYMMDD 203 = CCYYMMDDHHMM

Segment Notes:

This segment is used to specify the date of the cargo/goods handling and movement message.
DE 2005: Identification of the 'Document/message date/time' (code value 137) is mandatory in an EANCOM message.

Example:
DTM+137:20021008:102'

5. Segments Layout

Segment number: 6

HAN	- C	9 - Handling instructions			
Function: To specify handling and where necessary, notify hazards.					
		EDIFACT	GS1	*	Description
C524	HANDLING INSTRUCTIONS	C	**O**		
4079	Handling instruction description code	C an..3	**R**	*	13 = Destroy 16 = Labeling required 18 = Move according to instruction 19 = Pack according to instruction 20 = Prepare for shipment 21 = Reserve according to instruction 24 = Unpacking required PIC = Pick (GS1 Temporary Temporary Code) PKS = Pick in sequence (GS1 Temporary Code) When using the code PKS, Pick in sequence, the sequence in which the picking is to take place is specified by the sequence in which the LIN segments appear in the message.
1131	Code list identification code	C an..17	**N**		
3055	Code list responsible agency code	C an..3	**R**	*	9 = GS1
4078	Handling instruction description	C an..70	**O**		
C218	HAZARDOUS MATERIAL	C	**O**		
7419	Hazardous material category name code	C an..7	**D**		The preferred way to provide 'ADR international classification' or 'Hazardous material standard text' is to use DE 1131. This data element is only used if the actual code is known.
1131	Code list identification code	C an..17	**O**		ADR = Accord Europeen au transport international dangereuses (GS1 Temporary Code) HMT = Hazardous material standard text (GS1 Temporary Code)
3055	Code list responsible agency code	C an..3	**D**	*	9 = GS1
7418	Hazardous material category name	C an..35	**O**		To be used when no code value is available for DE7419.

Segment Notes:

This segment is used to provide handling instructions, and where necessary to provide hazardous information, relevant to the complete cargo/goods handling and movement message.
It is recommended that this segment should only be used to specify handling conditions which are valid for the complete message. If handling instructions are required which are specific to individual products this segment should not be used.

Example:
HAN+13::9'

5. Segments Layout

Segment number: 7

FTX	- C	9 - Free text			
Function: To provide free form or coded text information.					
		EDIFACT	GS1	*	Description
4451	Text subject code qualifier	M an..3	**M**		GEN = Entire transaction set HAN = Handling instructions PAC = Packing/marking information ZZZ = Mutually defined
4453	Free text function code	C an..3	**O**	*	1 = Text for subsequent use
C107	TEXT REFERENCE	C	**D**		This composite is only used when trading partners have agreed to use mutually defined code values.
4441	Free text value code	M an..17	**M**		001 = Reference to standard text between trading partners.
1131	Code list identification code	C an..17	**O**		
3055	Code list responsible agency code	C an..3	**D**		86 = Assigned by party originating the message 91 = Assigned by supplier or supplier's agent 92 = Assigned by buyer or buyer's agent 404 = Assigned by logistics service provider
C108	TEXT LITERAL	C	**D**		This composite is only used if coded text can not be used.
4440	Free text value	M an..512	**M**		
4440	Free text value	C an..512	**O**		
4440	Free text value	C an..512	**O**		
4440	Free text value	C an..512	**O**		
4440	Free text value	C an..512	**O**		
3453	Language name code	C an..3	**D**		ISO 639 two alpha code This data element is only used when non coded free text has been provided in data element C108.
4447	Free text format code	C an..3	**N**		

Segment Notes:

This segment is used to indicate free text information related to the entire message.
Use of this segment in free form is not recommended since in most cases it inhibits automatic processing of the cargo/goods handling and movement message.
Coded references to standard texts is an available functionality which enables automatic processing and reduces transmission and processing overheads. Standard texts should be mutually defined among trading partners and can be used to cover legal and other requirements.

Example:
FTX+HAN+1+001::91'
(E.g. Handling information standard text code 001 = Handle according to usual specification).

5. Segments Layout

Segment number: 8

SG2	- C	9 -	RFF-DTM
RFF	- M	1 -	Reference

Function:

To specify a reference.

		EDIFACT	GS1	*	Description
C506	REFERENCE	M	**M**		
1153	Reference code qualifier	M an..3	**M**		AWZ = Handling and movement reference number CR = Customer reference number CT = Contract number
1154	Reference identifier	C an..70	**R**		
1156	Document line identifier	C an..6	**N**		
4000	Reference version identifier	C an..35	**N**		
1060	Revision identifier	C an..6	**N**		

Segment Notes:

This segment is used to specify references which relate to the whole cargo/goods handling and movement message, for example, contract number.

Example:
RFF+CT:5252'

5. Segments Layout

Segment number: 9

SG2	- C	9 -	RFF-DTM
DTM	- C	9 -	Date/time/period

Function:

To specify date, and/or time, or period.

		EDIFACT	GS1	*	Description
C507	DATE/TIME/PERIOD	M	**M**		
2005	Date or time or period function code qualifier	M an..3	**M**	*	171 = Reference date/time
2380	Date or time or period value	C an..35	**R**		
2379	Date or time or period format code	C an..3	**R**		102 = CCYYMMDD 203 = CCYYMMDDHHMM

Segment Notes:

This segment is used to specify dates relating to the references given in the previous RFF segment.

Example:
DTM+171:20020804:102'

5. Segments Layout

Segment number: 10

SG3	- C	9 -	NAD-LOC-SG4
NAD	- M	1 -	Name and address

Function:

To specify the name/address and their related function, either by C082 only and/or unstructured by C058 or structured by C080 thru 3207.

		EDIFACT	GS1	*	Description
3035	Party function code qualifier	M an..3	**M**		BY = Buyer CA = Carrier DGC = Logistic service provider DP = Delivery party OB = Ordered by SU = Supplier WH = Warehouse keeper
C082	PARTY IDENTIFICATION DETAILS	C	**A**		
3039	Party identifier	M an..35	**M**		For identification of parties it is recommended to use GLN - Format n13.
1131	Code list identification code	C an..17	**N**		
3055	Code list responsible agency code	C an..3	**R**	*	9 = GS1
C058	NAME AND ADDRESS	C	**O**		This composite may only be used to fulfill the requirements of directive 2003/58/EC, article 4.
3124	Name and address description	M an..35	**M**		
3124	Name and address description	C an..35	**O**		
3124	Name and address description	C an..35	**O**		
3124	Name and address description	C an..35	**O**		
3124	Name and address description	C an..35	**O**		
C080	PARTY NAME	C	**D**		
3036	Party name	M an..35	**M**		Party Name in clear text.
3036	Party name	C an..35	**O**		
3036	Party name	C an..35	**O**		
3036	Party name	C an..35	**O**		
3036	Party name	C an..35	**O**		
3045	Party name format code	C an..3	**O**		
C059	STREET	C	**D**		
3042	Street and number or post office box identifier	M an..35	**M**		Building Name/Number and Street Name
3042	Street and number or post office box identifier	C an..35	**O**		
3042	Street and number or post office box identifier	C an..35	**O**		
3042	Street and number or post office box identifier	C an..35	**O**		
3164	City name	C an..35	**D**		City/Town name, clear text
C819	COUNTRY SUB-ENTITY DETAILS	C	**D**		

5. Segments Layout

Segment number: 10

		EDIFACT	GS1	*	Description
3229	Country sub-entity name code	C an..9	**O**		
1131	Code list identification code	C an..17	**O**		
3055	Code list responsible agency code	C an..3	**O**		
3228	Country sub-entity name	C an..70	**O**		County/State, clear text.
3251	Postal identification code	C an..17	**D**		Postal Code
3207	Country name code	C an..3	**D**		ISO 3166 two alpha code

Segment Notes:

This segment is used to identify the parties involved in the Cargo/goods handling and movement process. Identification of the service ordering party (e.g. buyer, supplier, etc) and the logistic service provider is mandatory in the message.

Example:
NAD+OB+5412345123453::9'
NAD+LSP+5432154111113::9'

Dependency Notes:
The following composites and data elements are only used when a coded name and address can not be used. The affected composites and data elements are as follows:
C080 - C059 - 3164 - C819 - 3251 - 3207

5. Segments Layout

Segment number: 11

SG3	- C	9 -	NAD-LOC-SG4
LOC	- C	9 -	Place/location identification

Function:

To identify a place or a location and/or related locations.

		EDIFACT	GS1	*	Description
3227	Location function code qualifier	M an..3	**M**		14 = Location of goods 22E = Movement to location (GS1 Temporary Code)
C517	LOCATION IDENTIFICATION	C	**A**		
3225	Location name code	C an..25	**R**		GLN - Format n13
1131	Code list identification code	C an..17	**O**		
3055	Code list responsible agency code	C an..3	**D**		9 = GS1 DE 3055 must be used if DE 3225 is used and does not contain an UN/LOCODE.
3224	Location name	C an..256	**N**		
C519	RELATED LOCATION ONE IDENTIFICATION	C	**N**		
3223	First related location name code	C an..25			
1131	Code list identification code	C an..17			
3055	Code list responsible agency code	C an..3			
3222	First related location name	C an..70			
C553	RELATED LOCATION TWO IDENTIFICATION	C	**N**		
3233	Second related location name code	C an..25			
1131	Code list identification code	C an..17			
3055	Code list responsible agency code	C an..3			
3232	Second related location name	C an..70			
5479	Relation code	C an..3	**N**		

Segment Notes:

This segment is used to identify locations relevant to the parties identified in the NAD segment.
If the message is being used to request any other handling function than movement, then only the location of the goods needs to be specified.
If the message is used for warehouse movement purposes then the identification of the location of goods (where they currently are) and the movement to location is mandatory.

Example:
LOC+14+5412345678908::9'
LOC+22E+5412345000013::9'
The goods are currently located at the location identified by the Global Location Number GLN 5412345678908 and are to be moved to the location identified by the location number 5412345000013. Both locations identified here are under the jurisdiction of the logistic service provider identified in the NAD segment using the DGC party qualifier.

5. Segments Layout

Segment number: 12

SG3	- C	9 -	NAD-LOC-SG4
SG4	- C	9 -	RFF
RFF	- M	1 -	Reference

Function:

To specify a reference.

		EDIFACT	GS1	*	Description
C506	REFERENCE	M	**M**		
1153	Reference code qualifier	M an..3	**M**	*	GN = Government reference number YC1 = Additional party identification (GS1 Temporary Code)
1154	Reference identifier	C an..70	**R**		
1156	Document line identifier	C an..6	**N**		
4000	Reference version identifier	C an..35	**N**		
1060	Revision identifier	C an..6	**N**		

Segment Notes:

This segment is used to specify reference numbers related to the trading parties identified in the previous NAD segment.

Example:
RFF+YC1:VR12345'
The source of the additional party identification is linked to the party specified in the NAD segment.

5. Segments Layout

Segment number: 13

SG8	- C	99 -	LIN-PIA-IMD-HAN-SG9-QTY-DTM-FTX-SG11-SG12
LIN	- M	1 -	Line item

Function:

To identify a line item and configuration.

		EDIFACT	GS1	*	Description
1082	Line item identifier	C an..6	**R**		Application generated number of the item lines within the cargo/goods handling and movement message.
1229	Action request/notification description code	C an..3	**N**		
C212	ITEM NUMBER IDENTIFICATION	C	**D**		This composite is only used for the identification of GS1 codes. If another coding structure is required, e. g., HIBC, this composite will not be used and the code will be detailed in the PIA segment.
7140	Item identifier	C an..35	**R**		Format n..14 GTIN
7143	Item type identification code	C an..3	**R**	*	SRV = GS1 Global Trade Item Number
1131	Code list identification code	C an..17	**N**		
3055	Code list responsible agency code	C an..3	**N**		
C829	SUB-LINE INFORMATION	C	**D**		
5495	Sub-line indicator code	C an..3	**R**	*	1 = Sub-line information
1082	Line item identifier	C an..6	**R**		
1222	Configuration level number	C n..2	**N**		
7083	Configuration operation code	C an..3	**N**		

Segment Notes:

This segment is used to signify the beginning of the detail section of the cargo/goods handling and movement message.
If Global Trade Item Numbers are available it is mandatory to use GTIN within the LIN segment.
The detail section is formed by a repeating group of segments, always starting with a LIN segment.

Note on DE 1082:
Numbering rule: In Part I, section 4.10 there is the recommendation “Within EANCOM® it is recommended that the line numbers used in the first occurrence of data element 1082 in the LIN segment be sequential, starting at 1 for each new message.”

Note on DE 7140:
Only the following significant digits are possible:
- 8 digits for GTIN 8 codes
- 12 digits for GTIN 12 codes
- 13 digits for GTIN 13 codes
- 14 digits for GTIN 14 codes

Dependency Note:
C829 is only used when sub-lines are required.
FOR A COMPLETE DESCRIPTION ON THE USAGE OF SUB-LINES PLEASE REFER TO PART I, SECTION 4.10.

LIN+1++4000862141404:SRV'

5. Segments Layout

Segment number: 14

SG8	- C	99 -	LIN-PIA-IMD-HAN-SG9-QTY-DTM-FTX-SG11-SG12
PIA	- C	9 -	Additional product id

Function:
To specify additional or substitutional item identification codes.

		EDIFACT	GS1	*	Description
4347	Product identifier code qualifier	M an..3	**M**	*	1 = Additional identification 5 = Product identification Product Id function coded has the following restricted coded functions: 1 - Additional Identification - To provide an additional identity for the product identified in the LIN segment. The additional identification can consist of : A supplemental identification which provides more information complementary to the main trade item number provided in the LIN segment, e.g. a harmonised system number, promotional variant number, product group number, etc. An alternative identification which may be used instead of the main trade item number provided in the LIN segment, e.g. a buyers part number, etc. 5 - Product Identification - To provide the primary product identification code when no GTIN has been provided in the LIN segment.
C212	ITEM NUMBER IDENTIFICATION	M	**M**		
7140	Item identifier	C an..35	**R**		
7143	Item type identification code	C an..3	**R**		HS = Harmonised system IN = Buyer's item number MF = Manufacturer's (producer's) article number PV = Promotional variant number SA = Supplier's article number SRV = GS1 Global Trade Item Number
1131	Code list identification code	C an..17	**O**		
3055	Code list responsible agency code	C an..3	**D**		9 = GS1
C212	ITEM NUMBER IDENTIFICATION	C	**O**		
7140	Item identifier	C an..35	**R**		
7143	Item type identification code	C an..3	**R**		
1131	Code list identification code	C an..17	**O**		
3055	Code list responsible agency code	C an..3	**D**		
C212	ITEM NUMBER IDENTIFICATION	C	**O**		
7140	Item identifier	C an..35	**R**		
7143	Item type identification code	C an..3	**R**		
1131	Code list identification code	C an..17	**O**		
3055	Code list responsible agency code	C an..3	**D**		

5. Segments Layout

Segment number: 14

		EDIFACT	GS1	*	Description
C212	ITEM NUMBER IDENTIFICATION	C	**O**		
7140	Item identifier	C an..35	**R**		
7143	Item type identification code	C an..3	**R**		
1131	Code list identification code	C an..17	**O**		
3055	Code list responsible agency code	C an..3	**D**		
C212	ITEM NUMBER IDENTIFICATION	C	**O**		
7140	Item identifier	C an..35	**R**		
7143	Item type identification code	C an..3	**R**		
1131	Code list identification code	C an..17	**O**		
3055	Code list responsible agency code	C an..3	**D**		

Segment Notes:

This segment is used to specify additional or substitutional item identification codes such as a buyer's or supplier's item number.

Examples :
PIA+1+ABC5343:MF'
In this example the PIA segment is used to provide an additional identification to the trade item number provided in the LIN segment. The GTIN 4000862141404 provided in the LIN segment refers to the manufacturers article number ABC5343.

PIA+5+2209953C001L:AC'
This example details the HIBC code 2209953C001L which is provided as the primary product code because no GTIN was provided in the LIN segment.

5. Segments Layout

Segment number: 15

SG8	- C	99 -	LIN-PIA-IMD-HAN-SG9-QTY-DTM-FTX-SG11-SG12
IMD	- C	99 -	Item description

Function:

To describe an item in either an industry or free format.

		EDIFACT	GS1	*	Description
7077	Description format code	C an..3	**O**		C = Code (from industry code list) F = Free-form S = Structured (from industry code list) B = Code and text
C272	ITEM CHARACTERISTIC	C	**O**		
7081	Item characteristic code	C an..3	**R**		
1131	Code list identification code	C an..17	**O**		
3055	Code list responsible agency code	C an..3	**D**	*	9 = GS1 Must be used if DE7081 contains an GS1 Code.
C273	ITEM DESCRIPTION	C	**A**		
7009	Item description code	C an..17	**O**		CU = Consumer unit (GS1 Permanent Code) DU = Despatch unit (GS1 Permanent Code) HN = Handling unit (GS1 Permanent Code) SG = Standard group of products (mixed assortment) (GS1 Permanent Code) TU = Traded unit (GS1 Permanent Code)
1131	Code list identification code	C an..17	**O**		
3055	Code list responsible agency code	C an..3	**D**		9 = GS1 91 = Assigned by supplier or supplier's agent 92 = Assigned by buyer or buyer's agent
7008	Item description	C an..256	**O**		
7008	Item description	C an..256	**O**		
3453	Language name code	C an..3	**O**		
7383	Surface or layer code	C an..3	**O**		

Segment Notes:

This segment is used to provide description of the current line item.
It is recommended that this segment should only be used for coded descriptions. Data element 7008 in clear text should only be used when no product code is available or when free-form descriptions are required by trading partners.
If you wish to indicate that promotional details are marked on the package, then this should be indicated in DE 7233 in the PAC segment.

Example:
IMD+C++TU::9'
IMD+F++:::CORN CRUNCHIES:CASE'

5. Segments Layout

Segment number: 16

SG8	- C	99 -	LIN-PIA-IMD-HAN-SG9-QTY-DTM-FTX-SG11-SG12
HAN	- C	9 -	Handling instructions

Function:

To specify handling and where necessary, notify hazards.

		EDIFACT	GS1	*	Description
C524	HANDLING INSTRUCTIONS	C	**R**		
4079	Handling instruction description code	C an..3	**R**	*	13 = Destroy 16 = Labeling required 18 = Move according to instruction 19 = Pack according to instruction 20 = Prepare for shipment 21 = Reserve according to instruction 24 = Unpacking required PIC = Pick (GS1 Temporary Temporary Code) PKS = Pick in sequence (GS1 Temporary Code) When using the code PKS, Pick in sequence, the sequence in which the picking is to take place is specified by the sequence in which the LIN segments appear in the message.
1131	Code list identification code	C an..17	**N**		
3055	Code list responsible agency code	C an..3	**R**	*	9 = GS1
4078	Handling instruction description	C an..70	**O**		
C218	HAZARDOUS MATERIAL	C	**O**		
7419	Hazardous material category name code	C an..7	**D**		The preferred way to provide 'ADR international classification' or 'Hazardous material standard text' is to use DE 1131. This data element is only used if the actual code is known.
1131	Code list identification code	C an..17	**O**		
3055	Code list responsible agency code	C an..3	**D**		
7418	Hazardous material category name	C an..35	**O**		To be used when no code value is available for DE7419.

Segment Notes:

This segment is used to provide handling instructions, and where necessary to provide hazardous information, relevant to the current line item.
Use of this segment at line level is not recommended if the HAN segment at heading level has been included.
Users are recommended to indicate handling instructions at either heading or detail level but not both.

Example:
HAN+16::9'

5. Segments Layout

Segment number: 17

SG8	- C	99 -	LIN-PIA-IMD-HAN-SG9-QTY-DTM-FTX-SG11-SG12
SG9	- C	9 -	NAD
NAD	- M	1 -	Name and address

Function:

To specify the name/address and their related function, either by C082 only and/or unstructured by C058 or structured by C080 thru 3207.

		EDIFACT	GS1	*	Description
3035	Party function code qualifier	M an..3	**M**		BY = Buyer CA = Carrier DP = Delivery party MF = Manufacturer of goods
C082	PARTY IDENTIFICATION DETAILS	C	**A**		
3039	Party identifier	M an..35	**M**		For identification of parties it is recommended to use GLN - Format n13.
1131	Code list identification code	C an..17	**N**		
3055	Code list responsible agency code	C an..3	**R**	*	9 = GS1
C058	NAME AND ADDRESS	C	**O**		This composite may only be used to fulfill the requirements of directive 2003/58/EC, article 4.
3124	Name and address description	M an..35	**M**		
3124	Name and address description	C an..35	**O**		
3124	Name and address description	C an..35	**O**		
3124	Name and address description	C an..35	**O**		
3124	Name and address description	C an..35	**O**		
C080	PARTY NAME	C	**D**		
3036	Party name	M an..35	**M**		Party Name in clear text.
3036	Party name	C an..35	**O**		
3036	Party name	C an..35	**O**		
3036	Party name	C an..35	**O**		
3036	Party name	C an..35	**O**		
3045	Party name format code	C an..3	**O**		
C059	STREET	C	**D**		
3042	Street and number or post office box identifier	M an..35	**M**		Building Name/Number and Street Name
3042	Street and number or post office box identifier	C an..35	**O**		
3042	Street and number or post office box identifier	C an..35	**O**		
3042	Street and number or post office box identifier	C an..35	**O**		
3164	City name	C an..35	**D**		City/Town name, clear text
C819	COUNTRY SUB-ENTITY DETAILS	C	**D**		
3229	Country sub-entity name code	C an..9	**O**		

5. Segments Layout

Segment number: 17

		EDIFACT	GS1	*	Description
1131	Code list identification code	C an..17	**O**		
3055	Code list responsible agency code	C an..3	**O**		
3228	Country sub-entity name	C an..70	**O**		County/State, clear text.
3251	Postal identification code	C an..17	**D**		Postal Code
3207	Country name code	C an..3	**D**		ISO 3166 two alpha code

Segment Notes:

This segment is used to identify parties related to the current line item. It may be used as an aid to product selection, e.g. all products from one manufacturer, or as information which is to be used when preparing a shipment containing the product, e.g. carrier, delivery party, etc.

Example:
NAD+DP+5412345111115::9'

Dependency Notes:
The following composites and data elements are only used when a coded name and address can not be used.
The affected composites and data elements are as follows:
C080 - C059 - 3164 - C819 - 3251 - 3207

5. Segments Layout

Segment number: 18

SG8	- C	99 -	LIN-PIA-IMD-HAN-SG9-QTY-DTM-FTX-SG11-SG12
QTY	- C	9 -	Quantity

Function:

To specify a pertinent quantity.

		EDIFACT	GS1	*	Description
C186	QUANTITY DETAILS	M	**M**		
6063	Quantity type code qualifier	M an..3	**M**		1 = Discrete quantity 52 = Quantity per pack 17E = Number of units in lower packaging or configuration level (GS1 Temporary Code) 45E = Number of units in higher packaging or configuration level (GS1 Temporary Code)
6060	Quantity	M an..35	**M**		
6411	Measurement unit code	C an..3	**D**		This DE is only used if the current line item is of variable quantity.

Segment Notes:

This segment is used to specify quantities related to the current line item.

Example:
QTY+52:40'

5. Segments Layout

Segment number: 19

SG8	- C	99 -	LIN-PIA-IMD-HAN-SG9-QTY-DTM-FTX-SG11-SG12
DTM	- C	9 -	Date/time/period

Function:

To specify date, and/or time, or period.

		EDIFACT	GS1	*	Description
C507	DATE/TIME/PERIOD	M	**M**		
2005	Date or time or period function code qualifier	M an..3	**M**		2 = Delivery date/time, requested 10 = Shipment date/time, requested 94 = Production/manufacture date 360 = Sell by date 361 = Best before date 365 = Packaging date X14 = Requested for delivery week commencing (GS1 Temporary Code)
2380	Date or time or period value	C an..35	**R**		
2379	Date or time or period format code	C an..3	**R**		102 = CCYYMMDD 203 = CCYYMMDDHHMM

Segment Notes:

This segment is used to specify dates related to the current line item. Dates specified here may be used as an aid to product selection, e.g. destroy all products with a sell by date greater than 1st of January 2002.

Example:
DTM+360:20020101:102'

5. Segments Layout

Segment number: 20

SG8	- C	99 -	LIN-PIA-IMD-HAN-SG9-QTY-DTM-FTX-SG11-SG12
FTX	- C	9 -	Free text

Function:

To provide free form or coded text information.

		EDIFACT	GS1	*	Description
4451	Text subject code qualifier	M an..3	**M**		CHG = Change information HAN = Handling instructions PAC = Packing/marking information ZZZ = Mutually defined
4453	Free text function code	C an..3	**O**	*	1 = Text for subsequent use
C107	TEXT REFERENCE	C	**D**		This composite is only used when trading partners have agreed to use mutually defined code values.
4441	Free text value code	M an..17	**M**		
1131	Code list identification code	C an..17	**O**		
3055	Code list responsible agency code	C an..3	**D**		86 = Assigned by party originating the message 91 = Assigned by supplier or supplier's agent 92 = Assigned by buyer or buyer's agent 404 = Assigned by logistics service provider
C108	TEXT LITERAL	C	**D**		This composite is only used if coded text can not be used.
4440	Free text value	M an..512	**M**		
4440	Free text value	C an..512	**O**		
4440	Free text value	C an..512	**O**		
4440	Free text value	C an..512	**O**		
4440	Free text value	C an..512	**O**		
3453	Language name code	C an..3	**D**		ISO 639 two alpha code This data element is only used when non coded free text has been provided in data element C108.
4447	Free text format code	C an..3	**N**		

Segment Notes:

This segment is used to indicate free text information related to the current line item.
The use of the FTX segment in free form is not recommended since in most cases it inhibits automatic processing of the handling and movement message. Coded references to standard texts is an available functionality which enables automatic processing and reduces transmission and processing overheads. Standard texts should be mutually defined among trading partners and can be used to cover legal or other requirements.

Example:
FTX+ZZZ+1+002::91'
e.g. Standard Text Code 002 = 'Move goods to bonded warehouse.'

5. Segments Layout

Segment number: 21

SG8	- C	99 -	LIN-PIA-IMD-HAN-SG9-QTY-DTM-FTX-SG11-SG12
SG11	- C	9 -	RFF
RFF	- M	1 -	Reference

Function:

To specify a reference.

		EDIFACT	GS1	*	Description
C506	REFERENCE	M	**M**		
1153	Reference code qualifier	M an..3	**M**		CR = Customer reference number CT = Contract number ON = Order number (buyer) PK = Packing list number VN = Order number (supplier)
1154	Reference identifier	C an..70	**R**		
1156	Document line identifier	C an..6	**O**		
4000	Reference version identifier	C an..35	**N**		
1060	Revision identifier	C an..6	**N**		

Segment Notes:

This segment is used to provide references specific to the line item. References specified here override any global references provided in the heading section of the cargo/goods handling and movement message when the same qualifier is used.

Example:
RFF+PK:8306'

5. Segments Layout

Segment number: 22

SG8	- C	99 -	LIN-PIA-IMD-HAN-SG9-QTY-DTM-FTX-SG11-SG12
SG12	- C	99 -	PAC-MEA-QTY-SG13
PAC	- M	1 -	Package

Function:

To describe the number and type of packages/physical units.

		EDIFACT	GS1	*	Description
7224	Package quantity	C n..8	**O**		
C531	PACKAGING DETAILS	C	**A**		
7075	Packaging level code	C an..3	**N**		
7233	Packaging related description code	C an..3	**O**		50 = Package barcoded EAN-13 or EAN-8 51 = Package barcoded ITF-14 52 = Package barcoded UCC or EAN-128
7073	Packaging terms and conditions code	C an..3	**O**		1E = Unpack from (GS1 Temporary Code) 2E = Repack in (GS1 Temporary Code) 3E = Pack in (GS1 Temporary Code)
C202	PACKAGE TYPE	C	**O**		
7065	Package type description code	C an..17	**A**		09 = Returnable pallet (GS1 Temporary Code) 201 = Pallet ISO 1 - 1/1 EURO Pallet (GS1 Temporary Code)
1131	Code list identification code	C an..17	**O**		
3055	Code list responsible agency code	C an..3	**D**		9 = GS1
7064	Type of packages	C an..35	**O**		
C402	PACKAGE TYPE IDENTIFICATION	C	**N**		
7077	Description format code	M an..3			
7064	Type of packages	M an..35			
7143	Item type identification code	C an..3			
7064	Type of packages	C an..35			
7143	Item type identification code	C an..3			
C532	RETURNABLE PACKAGE DETAILS	C	**N**		
8395	Returnable package freight payment responsibility code	C an..3			
8393	Returnable package load contents code	C an..3			

Segment Notes:

This segment is used to specify the packaging details for the currently identified line item.
When this segment is used for unpacking and re-packing purposes segment group 12 must be repeated to identify the 'unpack from' and 're-pack in' packages and any information associated with the unpack/re-pack, e.g. SSCC's.

Example:
PAC+10+:50+PK'
This example details 10 packages barcoded with EAN-13 or EAN-8.

5. Segments Layout

Segment number: 23

SG8	- C	99 -	LIN-PIA-IMD-HAN-SG9-QTY-DTM-FTX-SG11-SG12
SG12	- C	99 -	PAC-MEA-QTY-SG13
MEA	- C	9 -	Measurements

Function:

To specify physical measurements, including dimension tolerances, weights and counts.

		EDIFACT	GS1	*	Description
6311	Measurement purpose code qualifier	M an..3	**M**		PD = Physical dimensions (product ordered)
C502	MEASUREMENT DETAILS	C	**A**		
6313	Measured attribute code	C an..3	**A**		AEA = Loading height AEB = Stacking height HT = Height dimension LAY = Number of layers (GS1 Temporary Code) LN = Length dimension ULY = Number of units per layer (GS1 Temporary Code) WD = Width dimension
6321	Measurement significance code	C an..3	**O**		3 = Approximately 4 = Equal to
6155	Non-discrete measurement name code	C an..17	**N**		
6154	Non-discrete measurement name	C an..70	**N**		
C174	VALUE/RANGE	C	**R**		
6411	Measurement unit code	M an..3	**M**		
6314	Measurement value	C an..18	**O**		
6162	Range minimum value	C n..18	**O**		
6152	Range maximum value	C n..18	**O**		
6432	Significant digits quantity	C n..2	**O**		
7383	Surface or layer code	C an..3	**N**		

Segment Notes:

This segment is used to provide measurements relevant to the packaging described in the PAC segment.

Example:
MEA+PD+ULY+PCE:12'

5. Segments Layout

Segment number: 24

SG8	- C	99	-	LIN-PIA-IMD-HAN-SG9-QTY-DTM-FTX-SG11-SG12
SG12	- C	99	-	PAC-MEA-QTY-SG13
QTY	- C	9	-	Quantity

Function:

To specify a pertinent quantity.

		EDIFACT	GS1	*	Description
C186	QUANTITY DETAILS	M	**M**		
6063	Quantity type code qualifier	M an..3	**M**	*	52 = Quantity per pack
6060	Quantity	M an..35	**M**		
6411	Measurement unit code	C an..3	**O**		

Segment Notes:

This segment is used to specify the quantity per package specified in the PAC segment.

Example:
QTY+52:24'

5. Segments Layout

Segment number: 25

SG8	- C	99 -	LIN-PIA-IMD-HAN-SG9-QTY-DTM-FTX-SG11-SG12
SG12	- C	99 -	PAC-MEA-QTY-SG13
SG13	- C	9 -	PCI-GIN
PCI	- M	1 -	Package identification

Function:

To specify markings and labels on individual packages or physical units.

		EDIFACT	GS1	*	Description
4233	Marking instructions code	C an..3	**R**		10 = Mark batch number 14 = Mark expiry date 16 = Buyer's instructions 17 = Supplier's instructions 18 = Carrier's instructions 30 = Mark serial shipping container code 38 = Marked price 39 = Marked with Serial Shipping Container Code (SSCC) 32E = Mark GS1 number (GS1 Temporary Code) 34E = Marked with GS1 number (GS1 Temporary Code)
C210	MARKS & LABELS	C	**O**		
7102	Shipping marks description	M an..35	**M**		
7102	Shipping marks description	C an..35	**O**		
7102	Shipping marks description	C an..35	**O**		
7102	Shipping marks description	C an..35	**O**		
7102	Shipping marks description	C an..35	**O**		
7102	Shipping marks description	C an..35	**O**		
7102	Shipping marks description	C an..35	**O**		
7102	Shipping marks description	C an..35	**O**		
7102	Shipping marks description	C an..35	**O**		
7102	Shipping marks description	C an..35	**O**		
7102	Shipping marks description	C an..35	**O**		
8275	Container or package contents indicator code	C an..3	**O**		
C827	TYPE OF MARKING	C	**N**		
7511	Marking type code	M an..3			
1131	Code list identification code	C an..17			
3055	Code list responsible agency code	C an..3			

Segment Notes:

This segment is used to provide markings and labels information relevant to the packaging identified in the PAC segment.

Example:
PCI+30'
PCI+17+HANDLE WITH CARE'

5. Segments Layout

Segment number: 26

SG8	- C	99 -	LIN-PIA-IMD-HAN-SG9-QTY-DTM-FTX-SG11-SG12
SG12	- C	99 -	PAC-MEA-QTY-SG13
SG13	- C	9 -	PCI-GIN
GIN	- C	9 -	Goods identity number

Function:

To give specific identification numbers, either as single numbers or ranges.

		EDIFACT	GS1	*	Description
7405	Object identification code qualifier	M an..3	**M**		AW = Serial shipping container code BX = Batch number SRV = GS1 Global Trade Item Number (GS1 Temporary Code)
C208	IDENTITY NUMBER RANGE	M	**M**		
7402	Object identifier	M an..35	**M**		
7402	Object identifier	C an..35	**O**		
C208	IDENTITY NUMBER RANGE	C	**O**		
7402	Object identifier	M an..35	**M**		
7402	Object identifier	C an..35	**O**		
C208	IDENTITY NUMBER RANGE	C	**O**		
7402	Object identifier	M an..35	**M**		
7402	Object identifier	C an..35	**O**		
C208	IDENTITY NUMBER RANGE	C	**O**		
7402	Object identifier	M an..35	**M**		
7402	Object identifier	C an..35	**O**		
C208	IDENTITY NUMBER RANGE	C	**O**		
7402	Object identifier	M an..35	**M**		
7402	Object identifier	C an..35	**O**		

Segment Notes:

This segment is used to provide identification numbers relevant to the packaging identified in the PAC segment. In EANCOM it is recommended to use the Serial Shipping Container Code (SSCC) for unique identification of individual transport packages.

Example:
GIN+AW+354123450000000014:354123450000000106'

5. Segments Layout

Segment number: 27

UNT - M 1 - Message trailer					
Function: To end and check the completeness of a message.					
		EDIFACT	GS1	*	Description
0074	Number of segments in the message	M n..6	**M**		The total number of segments in the message is detailed here.
0062	Message reference number	M an..14	**M**		The message reference numbered detailed here should equal the one specified in the UNH segment.
Segment Notes: This segment is a mandatory UN/EDIFACT segment. It must always be the last segment in the message. Example: UNT+25+1'					

5. Segments Layout

Segment number: 28

UNZ - M 1 - Interchange trailer					
Function: To end and check the completeness of an interchange.					
		EDIFACT	GS1	*	Description
0036	Interchange control count	M n..6	**M**		Number of messages or functional groups within an interchange.
0020	Interchange control reference	M an..14	**M**		Identical to DE 0020 in UNB segment.
Segment Notes: This segment is used to provide the trailer of an interchange. UNZ+5+12345555' DE 0036: If functional groups are used, this is the number of functional groups within the interchange. If functional groups are not used, this is the number of messages within the interchange.					

6. Examples

Example 1

The following is an example of a Cargo/goods handling and movement message sent from a ordering party identified by GLN 5412345123453 to a logistic service provider identified by GLN 5432154111113. The message is dated the 30th of January 2002 and has the message reference WH3212.

The ordering party is requesting the pack and label services for 160 units of the product identified by GTIN 4000862141404. GLN 5412345111115 identifies the location of the product.

The ordering party requests that the 160 units of the product be packed onto to 2 non-returnable pallets. The configuration of the pallets is specified as being 2 layers, each with 40 units per layer. The Ordering party also requests that the ordering party's instructions 'Fragile - this way up' and the EAN.UCC Serial Shipping Container Codes 354123450000000014 and 354123450000000106 be marked on the pallets.

UNH+1+HANMOV:D:01B:UN:EAN004'	Message header
BGM+90E::9+WH3212+9'	Cargo/goods handling and movement number WH3212
DTM+137:20020130:102'	Message date 30th of January 2002
HAN+PAC::9'	Message requests packing services
HAN+LAB::9'	and labelling services
NAD+OB+5412345123453::9'	Party ordering the handling services is identified by GLN 5412345123453
NAD+LSP+5432154111113::9'	Logistic service provider is identified by GLN 5432154111113
LOC+14+5412345111115::9'	The location where the goods are to be found is identified by GLN 5412345111115
LIN+1++4000862141404:SRV'	The first product to be packed and labelled is identified by GTIN 4000862141404
IMD+C++TU'	This product is a traded unit
IMD+F++:::CORN CRUNCHIES:CASE'	The product name is Corn Crunchies
QTY+1:160'	160 units subject to instruction
PAC+2+::3E+08::9'	The product is to be packed on 2 one-way pallets
MEA+PD+LAY+PCE:2'	The pallet is to be packed in two layers
MEA+PD+ULY+NAR:40'	Each layer containing 40 units
QTY+52:80'	Total quantity per pallet is to be 80 units
PCI+30'	The pallets are to be marked with a Serial Shipping Container Code
GIN+BJ+354123450000000014+354123450000000106'	The Serial Shipping Container Codes to be marked are 354123450000000014 and 354123450000000106
PCI+17+FRAGILE - THIS WAY UP'	The pallets are to be marked with the text ‘Fragile - this way up’
UNT+20+1'	Total number of segments in the message equals 20

Example 2

The following is an example of a Cargo/goods handling and movement message sent from a supplier identified by GLN 5432154111113 to a logistics service provider identified by GLN 5411111123451. The message, dated the 10th of January 2002, has the message reference MV006123 and indicates that the ordered services should be completed by the 18th of January 2002 at 12 noon.

Two products are requested for movement from the location identified by GLN 5411111123444 to the location identified by GLN 5411111123550.

The supplier is requesting the movement of 450 units of the product identified by GTIN 4000862141404 and packed on 9 ISO 1 pallets, each containing 50 units, and the movement of 600 units of the product identified by GTIN 5412345111184 and packed on 3 ISO 2 pallets, each containing 200 units.

UNH+1+HANMOV:D:01B: UN:EAN004'	Message header
BGM+90E::9+MV006123+9'	Cargo/goods handling and movement number MV006123
DTM+137:20020110:102'	Message date 10th of January 2002
DTM+46E:200201181200:203'	The order is to be completed by midday on the 18th of January 2002
HAN+MOV::9'	Message requests moving services
NAD+SU+5432154111113::9'	Supplier is identified by GLN 5432154111113
NAD+LSP+5411111123451::9'	Logistic service provider is identified by GLN 5411111123451
LOC+14+5411111123444::9'	The location where the goods are to be found is identified by GLN 5411111123444
LOC+200+5411111123550::9'	The location to where the goods are to be moved is identified by GLN 5411111123550
LIN+1++4000862141404:SRV	The first product to be moved is identified by GTIN 4000862141404
QTY+1:450'	Quantity to be moved is 450 units
PAC+9+::3E+201::9'	Product is packed on 9ISO 1 pallets
QTY+52:50'	The quantity per pack is 50
LIN+2++5412345111184:SRV'	The second product to be moved is identified by GTIN 5412345111184
QTY+1:600'	Quantity to be moved is 600 units
PAC+3+::3E+202::9'	Product is packed on 3 ISO 2 pallets
QTY+52:200'	The quantity per pack is 200
UNT+18+1'	Total number of segments in the message equals 18

Example 3

The following is an example of a Cargo/goods handling and movement message sent from a buyer identified by GLN 5412345111115 to a warehouse keeper identified by GLN 5422331123459. The message is dated the 30th of June 2002 and has the message reference WH9852.

6. Examples

The message is a handling request which asks the warehouse keeper to unpack goods from their current packing configuration, re-pack them in a new packing configuration and prepare them for shipment to the delivery party identified by GLN 5412345123453.

The buyer is requesting his warehouse keeper to unpack 4000 units of the products identified by GTIN 4000862141404 which are currently packed on 2 wholesaler pallets, each containing 10 layers of 200 units of the product.

The unpacked products should be re-packed on two different pallet types. Three pallets, of type 1/4 Euro pallets, should be re-packed with 10 layers of 100 units per layer. The remainder of the products should be re-packed on one pallet of pallet type 1/8 Euro pallet each containing 20 layers of 50 units per layer.

UNH+1+HANMOV:D:01B: UN:EAN004'	Message header
BGM+90E::9+WH9852+9'	Cargo/goods handling and movement number WH9852
DTM+137:20020630:102'	Message date is 30th of June 2002
HAN+UNP::9'	Message requests un-packing services
HAN+PAC::9'	and packingservices
HAN+PFS::9'	and preparation for shipment service
NAD+BY+5412345111115::9'	Buyer is identified by GLN 5412345111115
NAD+WH+5422331123459::9'	Warehouse keeper is identified by GLN 5422331123459
NAD+DP+5412345123453::9'	Delivery party is identified by GLN 5412345123453
LIN+1++4000862141404:SRV'	Product identified by GTIN 4000862141404
QTY+1:4000'	4000 units subject to the instruction
PAC+2+::1E+210::9'	Un-pack from 2 wholesaler pallets
MEA+PD+LAY+PCE:10'	Pallets have 10 layers
MEA+PD+ULY+NAR:200'	Each layer contains 200 articles
QTY+52:2000'	Quantity per pack is 2000
PAC+3+::2E+203::9'	Re-pack in 3 1/4 Euro pallets
MEA+PD+LAY+PCE:10'	With 10 layers
MEA+PD+ULY+NAR:100'	and each layer containing 100 units
QTY+52:1000'	Quantity per pack is 1000
PAC+1+::2E+204::9'	Re-pack in 1 1/8 Euro pallet
MEA+PD+LAY+PCE:20'	With 20 layers
MEA+PD+ULY+NAR:50'	and each layer containing 50 units
QTY+52:1000'	Quantity per pack is 1000
UNT+24+1'	Total number of segments in the message equals 24

Example 4

The following is an example of a Cargo/goods handling and movement message sent from a supplier identified by

6. Examples

GLN 5071615111110 to his logistic service provider identified by GLN 5098765111111. The message is dated the 14th of February 2002 and has the message reference WH6222.

The message requests that the products detailed in the message be picked from the location identified by GLN 5098765222220 and prepared for shipment to the delivery party identified by GLN 5071615222229, using the services of the carrier identified by GLN 5432154111113.

The products and quantities for picking are identified by the GTINs 4000862141404 (12 units), 5412345111184 (20 units), and 4000862141411 (10 units). All three products are to be packed onto separate ISO 0 pallets.

UNH+1+HANMOV:D:01B: UN:EAN004'	Message header
BGM+90E::9+WH6222+9'	Cargo/goods handling and movement number WH6222
DTM+137:20020214:102'	Message date 14th of February 2002
HAN+PIC::9'	Message requests picking services
HAN+PFS::9'	and preparation for shipment service
NAD+SU+5071615111110::9'	Supplier is identified by GLN 5071615111110
NAD+LSP+5098765111111::9'	Logistic service provider is identified by GLN 5098765111111
LOC+14+5098765222220::9'	The location where the goods are to be found is identified by GLN 5098765222220
NAD+CA+5432154111113::9'	The carrier for the shipment is identified by GLN 5432154111113
NAD+DP+5076152222229::9'	The delivery party for the shipment is identified by GLN 5076152222229
LIN+1++4000862141404:SRV'	First product identified by GTIN 4000862141404
QTY+1:12'	12 units subject to the instruction
PAC+1+::3E+200::9'	Products are to be packed in 1 ISO 0 pallet
QTY+52:12'	Quantity per pack is 12
LIN+2++5412345111184:SRV'	Second product identified by GTIN 5412345111184
QTY+1:20'	20 units subject to the instruction
PAC+1+::3E+200::9'	Products are to be packed in 1 ISO 0 pallet
QTY+52:20'	Quantity per pack is 20
LIN+3++4000862141411:SRV'	Third product identified by GTIN 4000862141411
QTY+1:10'	10 units subject to the instruction
PAC+1+::3E+200::9'	Products are to be packed in 1 ISO 0 pallet
QTY+52:10'	Quantity per pack is 10
UNT+23+1'	Total number of segments in the message equals 23

Example 5

The following is an example of a Cargo/goods handling and movement message sent from a supplier identified by

6. Examples

GLN 5098765222220 to his logistic service provider identified by GLN 5071615222229. The message is dated the 4th of January 2002 and has the message reference WH0655.

The message requests the logistic services provider to pick the products and quantities detailed in sequence, to pack them on the pallets specified, and to label the pallets according to the details provided.

GTIN	Quantity	Pallet type	Units per layer	SSCC
4000862141404	20	1/4 Euro	20	350987650000000010
5412345111184	12	1/4 Euro	12	350987650000000010
4000862141411	10	1/8 Euro	10	350987650000001055

Note :
The product identified by GTIN 5412345111184 is to be picked and packed on the pallet first, with the product identified by GTIN 4000862141404 packed on the same pallet on top of the first product picked.

UNH+1+HANMOV:D:01B: UN:EAN004'	Message header
BGM+90E::9+WH0655+9'	Cargo/goods handling and movement number WH0655
DTM+137:20020104:102'	Message date 4th of January 2002
HAN+PKS::9'	Message requests picking in sequence service
HAN+PAC::9'	and packing services
HAN+LAB::9'	and labelling services
NAD+SU+5098765222220::9'	Supplier is identified by GLN 5098765222220
NAD+LSP+5071615222229::9'	Logistic service provider is identified by GLN 5071615222229
LIN+1++5412345111184:SRV'	First product to be picked is identified by GTIN 5412345111184
QTY+1:12'	12 units subject to the instruction
PAC+1+::3E+203::9'	Product is to be packed in one 1/4 Euro pallet
MEA+PD+ULY+PCE:12'	With 10 pieces per layer
QTY+52:12'	Quantity per pack is 12
PCI+30'	The pallet is to be marked with a Serial Shipping Container Code
GIN+BJ+350987650000000010’	Serial Shipping Container Code 350987650000000010 is to be marked
LIN+2++4000862141404:SRV'	Second product to be picked is identified by GTIN 4000862141404
QTY+1:20'	20 units subject to the instruction
PAC+1+::3E+203::9'	Product is to be packed in one 1/4 Euro pallet
MEA+PD+ULY+PCE:20'	With 20 pieces per layer

QTY+52:20'	Quantity per pack is 20
PCI+30'	The pallet is to be marked with a Serial Shipping Container Code
GIN+BJ+350987650000000010’	Serial Shipping Container Code 350987650000000010 is to be marked
LIN+3++4000862141411:SRV'	Second product to be picked is identified by GTIN 4000862141411
QTY+1:10'	10 units subject to the instruction
PAC+1+::3E+204::9'	Product is to be packed in one 1/8 Euro pallet
QTY+52:10'	Quantity per pack is 10
PCI+30'	The pallet is to be marked with a Serial Shipping Container Code
GIN+BJ+350987650000001055	Serial Shipping Container Code 350987650000001055 is to be marked
UNT+29+1'	Total number of segments in the message equals 29

Example 6

The following is an example of a Cargo/goods handling and movement message sent from a supplier identified by GLN 5422331123459 to his logistic service provider identified by GLN 5432154111113. The message is dated the 14th of January 2002 and has the message reference WH5155.

The message requests the logistic services provider to first pick 12 units of the product identified by GTIN 5412345111184 from the returnable pallet identified by the EAN.UCC SSCC 354107380000001051 and to pack them on the pallet type ISO 1 and to label this pallet with the EAN.UCC SSCC 354123450000000106.

Next, 20 units of the product identified by GTIN 4000862141404 are to be picked from the returnable pallet identified by the EAN.UCC SSCC 354123450000000014 and packed on the ISO 1 pallet identified by the EAN.UCC SSCC 354123450000000106 on top of the first product loaded on this pallet.

Finally, 10 units of the product identified by GTIN 4000862141411 are to be taken from the returnable pallet identified by the EAN.UCC SSCC 354107380000001068 and put on a 1/8 Euro pallet. This pallet is to be labelled with the EAN.UCC SSCC 354123451234567892 and the original article number, 4000862141411, of the product.

GTIN	Qty	From pallet type	From pallet SSCC	To pallet type	To pallet SSCC
4000862141404	20	Return	354123450000000014	ISO 1	354123450000000106
5412345111184	12	Return	354107380000001051	ISO 1	354123450000000106
4000862141411	10	Return	354107380000001068	1/8 Euro	354123451234567892

UNH+1+HANMOV:D:01B: UN:EAN004'	Message header
BGM+90E::9+WH5155+9'	Cargo/goods handling and movement number WH5155

6. Examples

DTM+137:20020114:102'	Message date 14th of January 2002
HAN+UNP::9'	Message requests un-packing service
HAN+PKS::9'	and pick in sequence service
HAN+PAC::9'	and packing service
HAN+LAB::9'	and labelling service
NAD+SU+5422331123459::9'	Supplier is identified by GLN 5422331123459
NAD+LSP+5432154111113::9'	Logistic service provider is identified by GLN 5432154111113
LIN+1++5412345111184:SRV'	First product to be picked is identified by GTIN 5412345111184
QTY+1:12'	12 units subject to the instruction
PAC+1+::1E+09::9'	Are to be un-packed from one returnable pallet
QTY+52:12'	Quantity per pack is 12
PCI+33E'	The pallet is marked with a Serial Shipping Container Code
GIN+BJ+354107380000001051'	Serial Shipping Container Code 354107380000001051 is marked on package
PAC+1+::3E+201::9'	Are to be packed in one ISO 1 pallet
QTY+52:12'	Quantity per pack is 12
PCI+33E'	The pallet is marked with a Serial Shipping Container Code
GIN+BJ+354123450000000106'	Serial Shipping Container Code is marked on package 354123450000000106
LIN+2++4000862141404:SRV'	Second product to be picked is identified by GTIN 4000862141404
QTY+1:20'	20 units subject to the instruction
PAC+1+::1E+09::9'	Are to be un-packed from one returnable pallet
QTY+52:20'	Quantity per pack is 20
PCI+33E'	The pallet is marked with a Serial Shipping Container Code
GIN+BJ+354123450000000014'	Serial Shipping Container Code 354123450000000014 is marked on package
PAC+1+::3E+201::9'	Are to be packed in one ISO 1 pallet
QTY+52:20'	Quantity per pack is 20
PCI+30'	The pallet is to be marked with a Serial Shipping Container Code
GIN+BJ+354123450000000106'	Serial Shipping Container Code 354123450000000106 is to be marked on package
LIN+3++4000862141411:SRV'	Third product to be picked is identified by GTIN 4000862141411

6. Examples

QTY+1:10'	10 units subject to the instruction
PAC+1+::1E+09::9'	Are to be un-packed from one returnable pallet
QTY+52:10'	Quantity per pack is 10
PCI+33E'	The pallet is marked with a Serial Shipping Container Code
GIN+BJ+354107380000001068'	Serial Shipping Container Code 354107380000001068 is marked on package
PAC+1+::3E+204::9'	Are to be packed in one 1/8 Euro pallet
QTY+52:10'	Quantity per pack is 10
PCI+30'	The pallet is to be marked with a Serial Shipping Container Code
GIN+BJ+354123451234567892'	Serial Shipping Container Code 354123451234567892 is to be marked on package
PCI+32E'	The pallet is also to be marked with an EAN/UPC number
GIN+EU+4000862141411'	EAN/UPC number 4000862141411 is to be marked on package
UNT+42+1'	Total number of segments in the message equals 42

Note :
The EDI interchange will include the UNB..UNZ segments and, if applicable, the UNG..UNE segments. (See part 1 section 5.7).